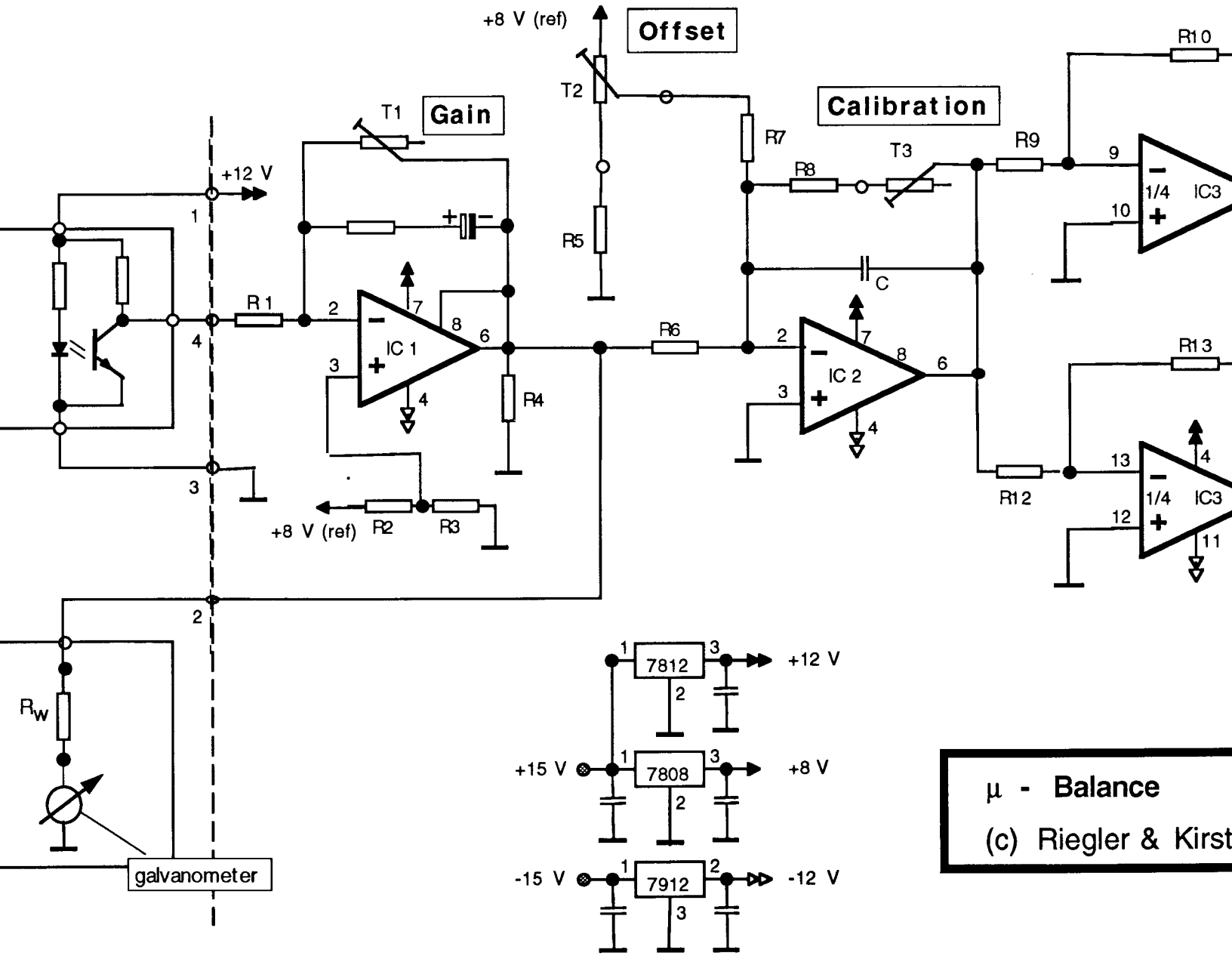
+8 V (ref)
Offset
T2
R5
Gain
T1
+12 V
R1
IC 1
R4
+8 V (ref)
R2
R3
R6
R7
Calibration
R8
T3
C
IC 2
R9
R10
1/4 IC3
R12
R13
1/4 IC3
R_W
galvanometer
7812
+12 V
+15 V
7808
+8 V
-15 V
7912
-12 V
μ - Balance
(c) Riegler & Kirst