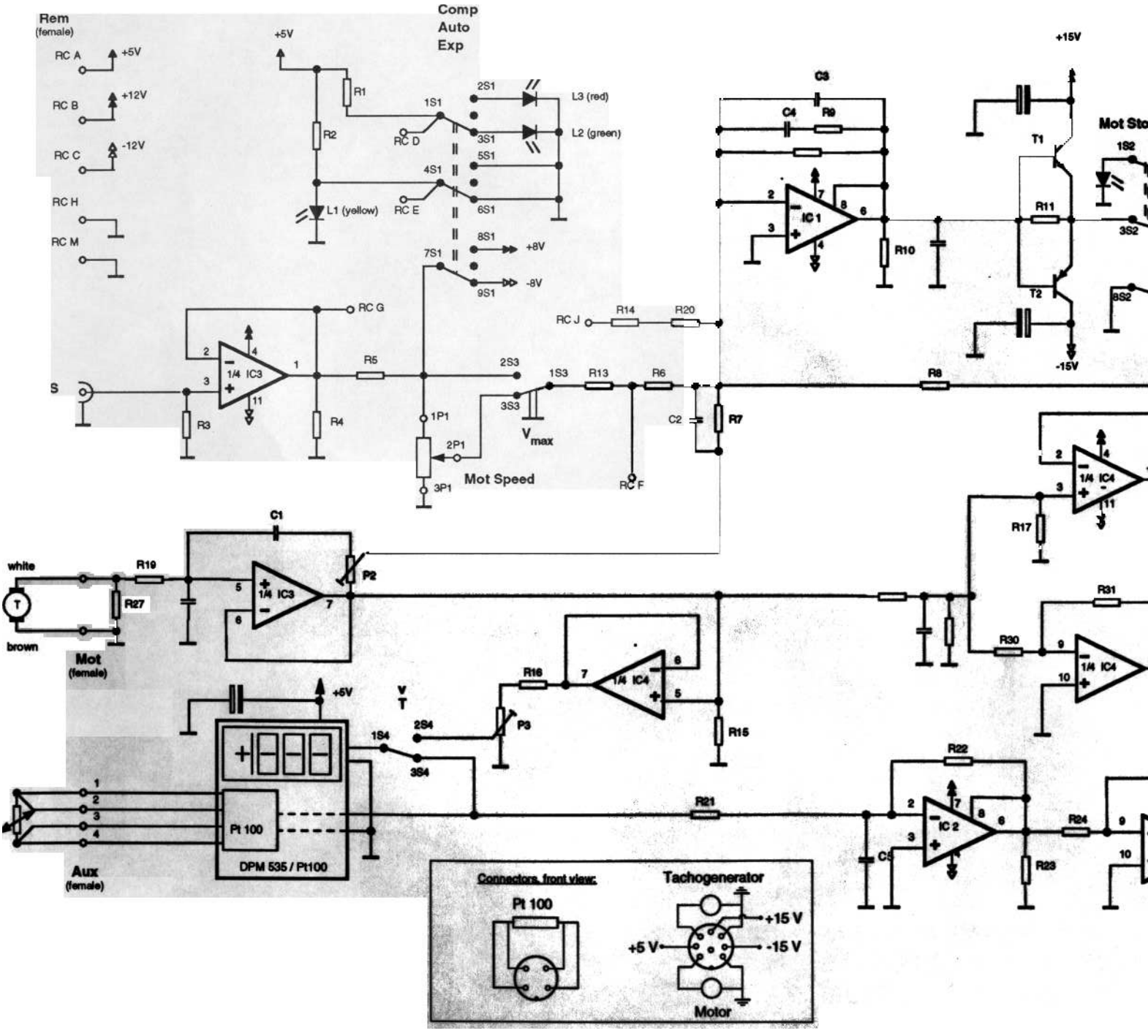
Rem
(female)
RC A
+5V
RC B
+12V
RC C
-12V
RC H
RC M
Comp
Auto
Exp
+5V
R1
R2
1S1
RC D
2S1
L3 (red)
3S1
L2 (green)
5S1
4S1
RC E
6S1
L1 (yellow)
8S1
+8V
7S1
9S1
-8V
RC G
RC J
R14
R20
1/4 IC3
R5
2S3
1S3
R13
R6
3S3
R3
R4
1P1
2P1
3P1
Mot Speed
RC F
C2
R7
R8
C3
C4
R9
IC 1
R10
+15V
T1
R11
T2
-15V
Mot Sto
1S2
3S2
8S2
1/4 IC4
R17
R31
R30
C1
P2
white
R19
R27
brown
Mot
(female)
R16
P3
R15
V
T
2S4
1S4
3S4
+5V
Pt 100
DPM 535 / Pt100
Aux
(female)
R21
R22
IC 2
C5
R23
R24
Connectors, front view:
Pt 100
Tachogenerator
+15 V
+5 V
-15 V
Motor