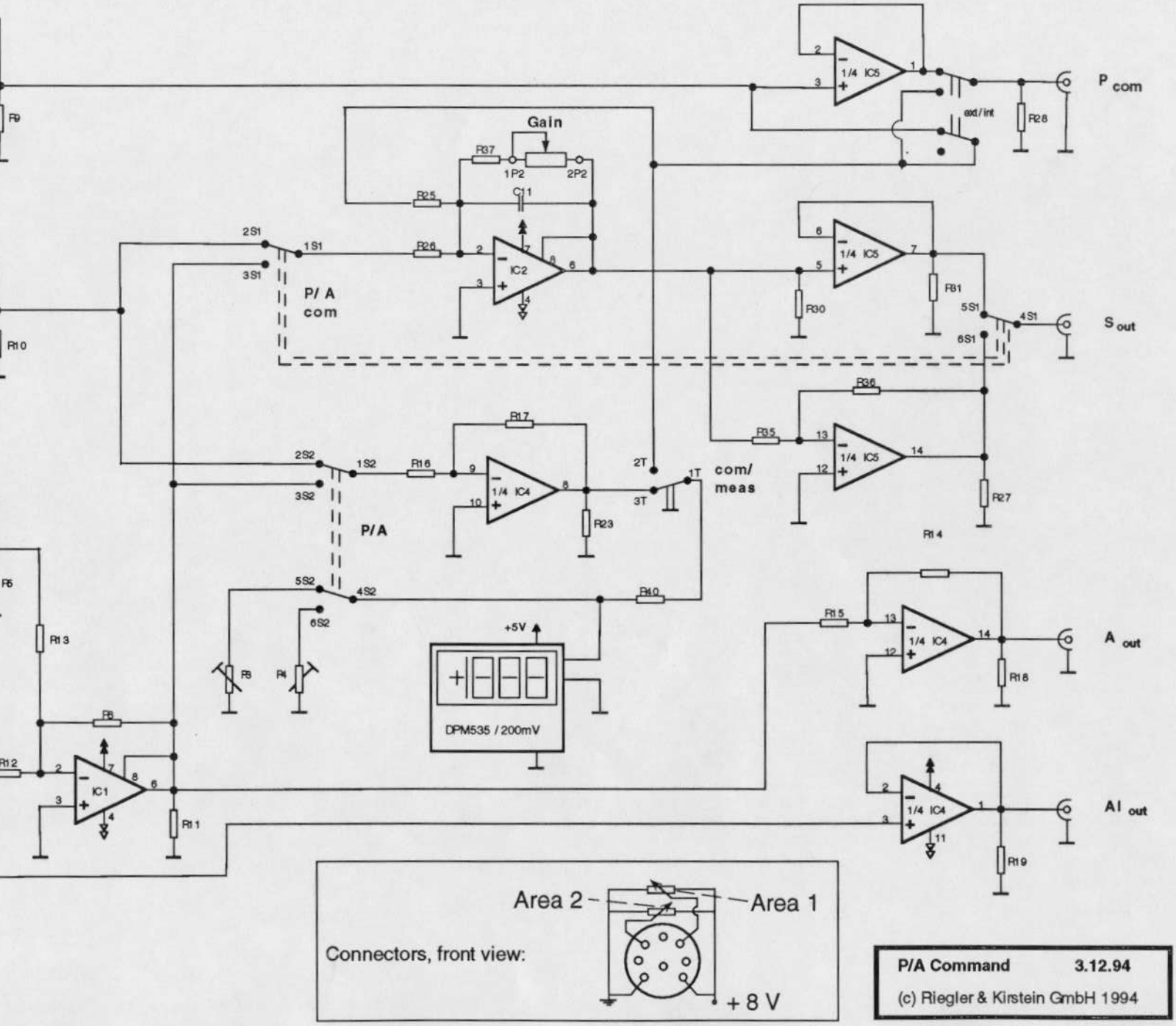

P/A Command **3.12.94**

(c) Riegler & Kirstein GmbH 1994